KNAUF CEILING Solutions

DATASHEET

HERADESIGN®
Inspection opening
(standard size)

HERADESIGN® Inspection access panels (or Inspection openings) are the ideal solution for providing easy access to services concealed behind ceilings and walls.

- Inspection access panels are specially designed for HERADESIGN® acoustic panels, and are available in standard sizes.

DATASHEET

HERADESIGN® Inspection opening (standard size)

Product descripton	Inspection access panels are specially designed for HERADESIGN® acoustic panels, and are available in standard sizes. Two aluminium frames with a pressure closing, safety catch are built into the HERADESIGN® acoustic panels.

Technical data

Dimensions (mm)	For panel thickness (mm)	Surface
1200 x 600 1250 x 625	25	Macro, Fine, Superfine, Micro, Plano
	35	Fine, Superfine, Micro
600 x 600 625 x 625	25	Macro, Fine,Superfine, Micro, Plano
	35	Fine, Superfine, Micro

Area of application	Suitable for suspended ceiling and wall mounting installations without fire protection, and where permanent access to the ceiling or wall space is required (e.g. maintenance and inspection work).
Storage	Products must be stored in a dry place, and protected from sunlight. Furthermore, the goods should be further processed within should be processed within 1 year from the date of delivery from our company.
Delivery	On a pallet with ready-installed HERADESIGN® panel in the flap.
Note	Not suitable for indoor swimming pools and outdoor applications.

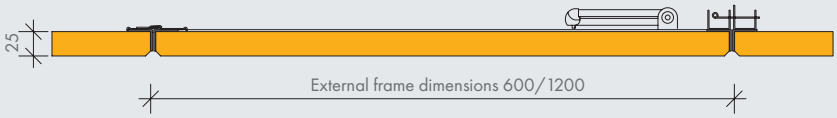

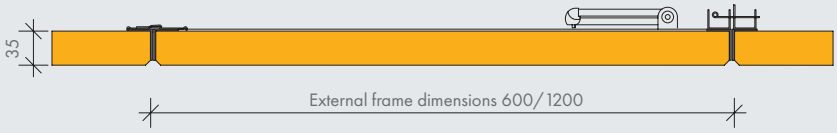

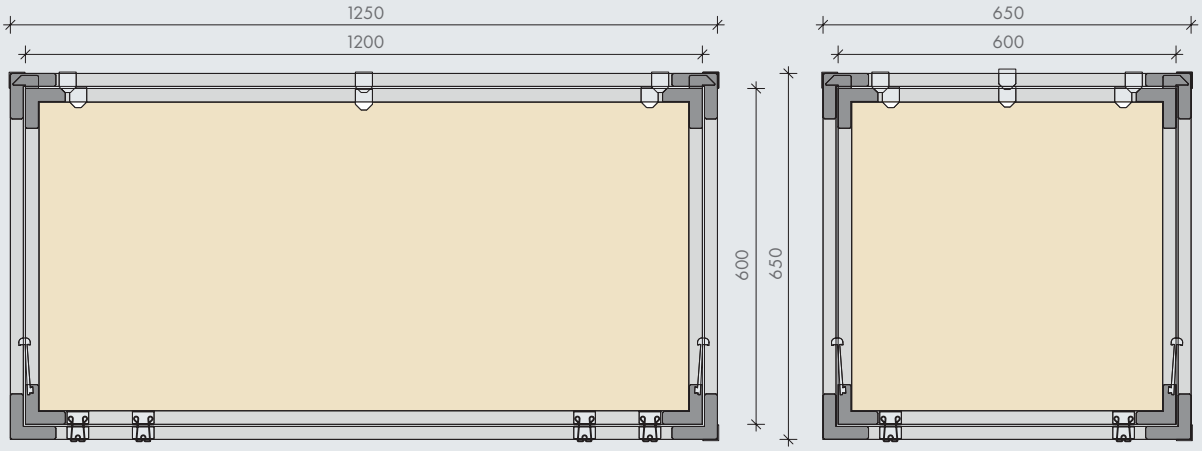

DATASHEET

HERADESIGN® Inspection opening (standard size)

The following installation instructions refer to inspection opening in the size of 1200 x 600mm on a substructure made of CD profiles. For 1250 x 625mm flaps, this manual should be applied accordingly.

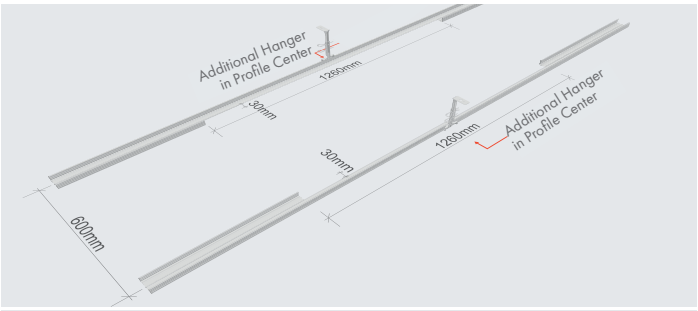

Cut a notch in the CD profiles, which are to carry or support the flaps. When mounted parallel to the axial direction of the support profiles, the cutout is 1260/30mm. There are two additional hangers to insert in the middle of the cutout.
Length of the cutout = external frame dimension + 10mm.

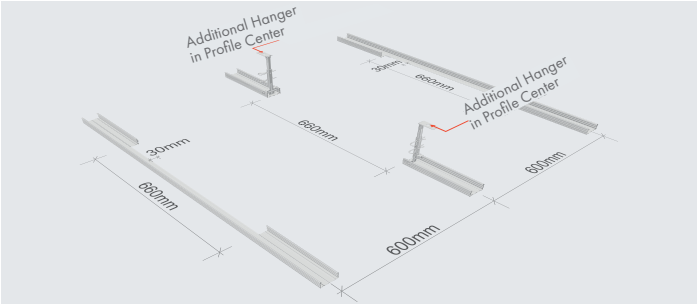

When mounted parallel to the axial direction of the support profiles, the cutout is 660/30mm. There are two additional hangers to insert in the middle of the cutout.
Length of the notch = external frame dimension + 10mm.

3.

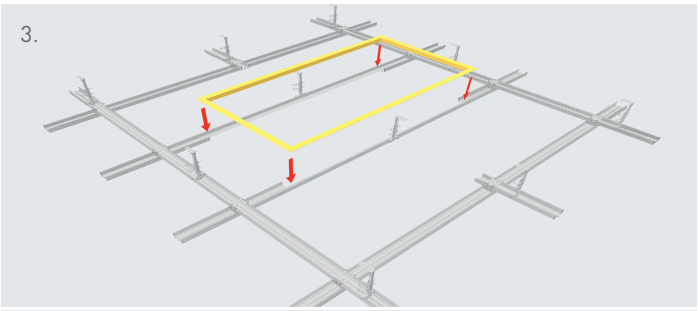

Place the outer flap frame on the notched support profiles.

4.

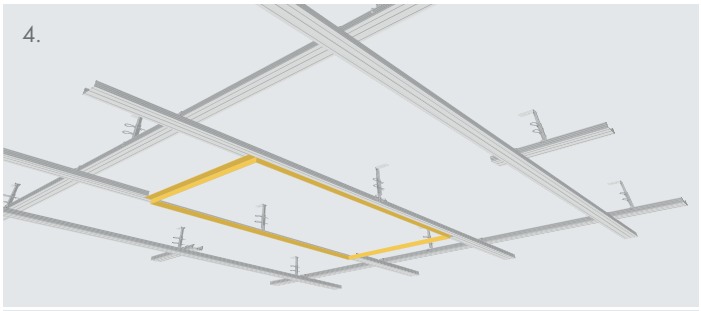

The attachment of the frame to the substructure takes place in the course of the panel installation.

5.

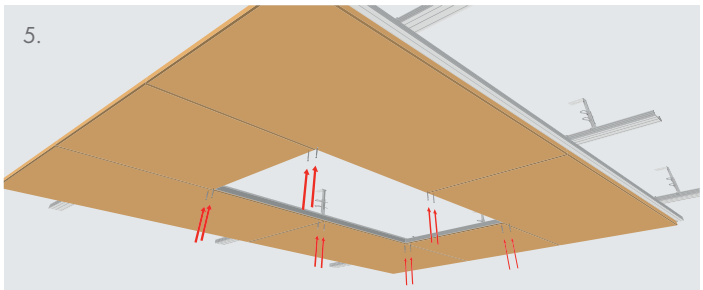

Align the outer flap frame to the adjacent HERADESIGN® panels and, if necessary, fix them torsion-free to the panels with four screw clamps. Pre-drill the 12 screw holes from below through the panel and through the inspection opening frame including CD profile. Drilling diameter 3mm.

6.

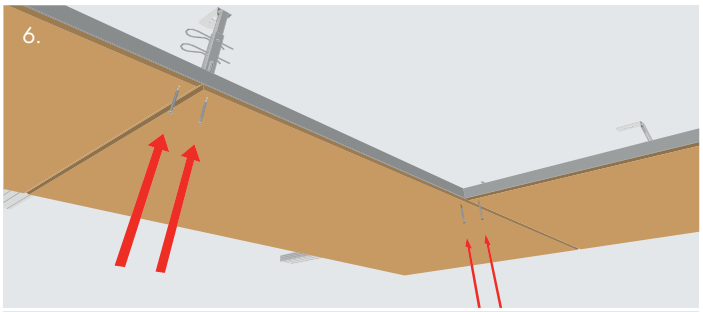

Screw the HERADESIGN® panels to the frame and substructure with 12 HERADESIGN® 4.5 x 50mm screws.
Please note: Make sure that the screw heads are flush with the surface of the panel.

7.

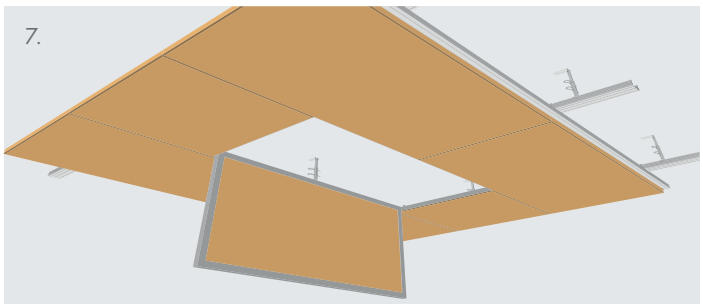

Insert the inspection opening wing with the integrated HERADESIGN® panel.

8.

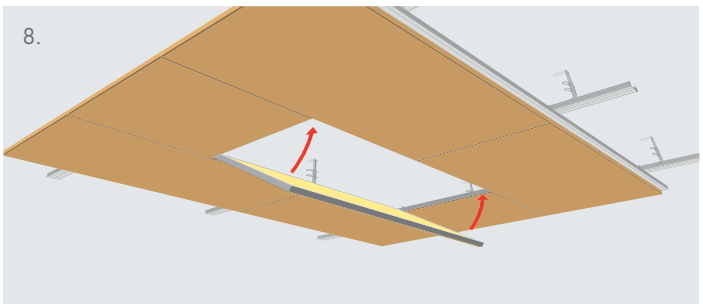

Before closing the flap, attach the safety chain to the wing section and hook the notches into the frame. The inspection opening can be opened by pressing lightly on the HERADESIGN® panel below the snaps.

Products may vary from country to country. Please contact your local sales representative. For further information and legal notice, please visit our website.